Diesel emission control has never been easier!

Diesel engines are an excellent power source, with the exception of their emissions. Particulate Matter (PM)/soot and Oxides of Nitrogen (NOx) are significant contributors to air pollution causing negative environmental and health impacts worldwide.

The BlueMAX™ 100 is a Selective Catalytic Reduction (SCR) system and is designed for reducing NOx from medium to heavy duty diesel engines in off-road applications. The system typically provides a reduction in NOx emissions in the range of 65 to 90% under transient diesel engine conditions and over 90% in steady-state operation.

In the BlueMAX™ 100 system, NOx is reduced over the SCR catalyst through chemical reaction with Diesel Exhaust Fluid (DEF). The SCR sub-system consists of the SCR catalytic converter, a DEF dosing unit, and the DEF tank (see diagram). The DEF control strategy relies on NOx concentration measurements by a sensor positioned upstream of the SCR catalyst. Based on the NOx sensor signal in combination with an engine mass air flow and temperature sensors, the Electronic Control Unit (ECU) calculates the amount of urea which needs to be injected for optimum NOx reductions. The NOx sensor-based control strategy makes the system very suitable for both original equipment and retrofit applications. System calibration (i.e. engine mapping) is not required and the system can be installed on a wide range of diesel engines, both mechanically and electronically controlled.

The Nett Technologies' BlueMAX™ 100 ECU continuously monitors and measures the performance of all system sensors and components. In the event of malfunction, the ECU will indicate the existence of a problem to the operator via the system display. In addition to 65-90% NOx reduction, the system also provides a reduction in Particulate Matter (PM) greater than 12%, Carbon Monoxide (CO) greater than 92%, and Hydrocarbons (HC) greater than 99% from the engine exhaust.

BlueMAX™

100

SCR system

scan and learn

Sold and supported globally, Nett Technologies Inc., develops and manufactures proprietary catalytic solutions that use the latest in diesel oxidation catalyst (DOC), diesel particulate filter (DPF), selective catalytic reduction (SCR), engine electronics, stationary engine silencer, exhaust system and exhaust gas dilution technologies. Our reliable and real-world emission solutions will extend the usable life of existing equipment while allowing you to avoid costly future replacements. We manufacture emission control solutions that are California Air Resources Board (ARB) and the U.S. Environmental Protection Agency (EPA) verified. As the emission control authority, we are here to help you navigate through the hassles and complexities of emission control compliance.

NETT® TECHNOLOGIES INC.

...the emission control authority.

www.nettinc.com

BlueMAX™ 100 PRODUCT OVERVIEW

How does the BlueMAX™ 100 system work?

The Nett Technologies' BlueMAX™ 100 system is designed to control the emissions of Oxides of Nitrogen (NOx) from medium and heavy duty diesel engines in off-road applications. In Selective Catalytic Reduction (SCR) technology, NOx is reduced over the SCR catalyst through chemical reaction with a reducing agent, either ammonia (NH3) or urea. For safe and easy handling, the BlueMAX™ 100 system utilizes urea for its operation. A Diesel Particulate Filter (DPF) can be fitted as an option for simultaneous reduction of particulate matter.

The main components of the BlueMAX™ 100 system include the SCR catalytic converter, the computerized Urea Dosing System (UDS), and the urea tank (see diagram). The urea control strategy relies on NOx concentration measurements by a sensor positioned upstream of the SCR catalyst. Based on the NOx sensor signal in combination with an engine air mass flow and temperature sensors, the computer calculates the amount of urea which needs to be injected for optimum NOx reductions.

The NOx sensor-based control strategy makes the system very suitable for both original equipment and retrofit applications. System calibration (i.e. engine mapping) is not required and the system can be installed on a wide range of diesel engines, both mechanically and electronically controlled. Urea (in the form of a 32.5% water-based solution) is metered by a computer controlled dosing pump into the exhaust pipe upstream of the SCR catalyst through an injection nozzle.

Compressed air from the air brake line or a standalone air compressor is used to atomize the urea for optimum dispersion, to maximize the NOx reductions and to minimize the amount of urea required.

The Nett Technologies' BlueMAX™ 100 system is verified by US Environmental Protection Agency (EPA) for medium and heavy duty diesel engines in off-road applications. For simultaneous PM reduction, the system can optionally include either an active regeneration DPF, or a passive catalyzed DPF. Passive filters are generally used on engines running under heavy load, while active filters are used on engines operating under lighter duty cycles.

BlueMAX™ 100 System Schematic Drawing

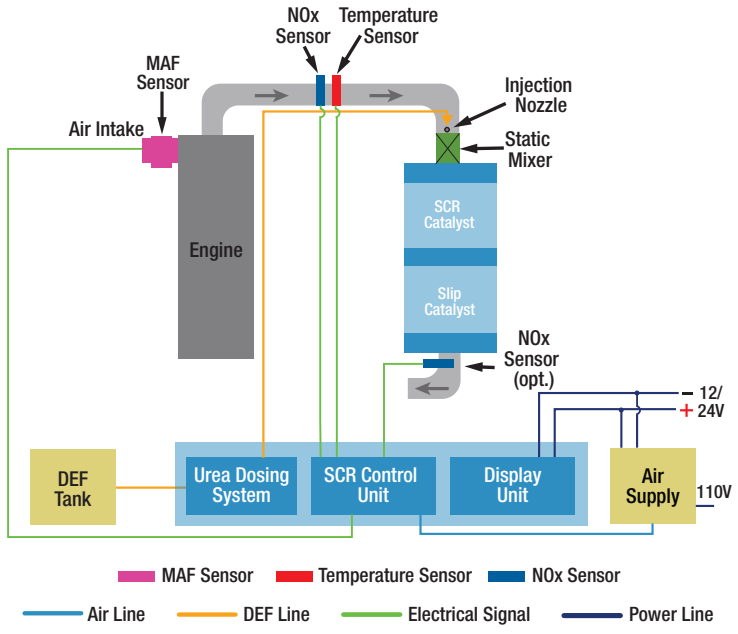

PRODUCT FEATURES

- Compact design for application Direct-Fit or muffler replacement
- Pre-fitted sensors
- Robust structure designed for off-road harsh environment & operating conditions
- System maintenance intervals of 2000 to 5000 hours
- Data logging capabilities & computerized controller with 3 customizable alarms
- Colour display informing of system operational conditions and status

EMISSIONS REDUCTION PERFORMANCE

Typical BlueMAX™ 100 Emissions Reduction Performance

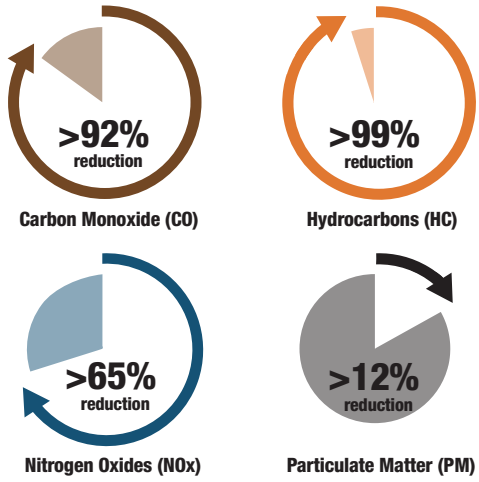

NETT TECHNOLOGIES INC.®

...the emission control authority.

Contact Nett Technologies Inc. today at:

Phone: (905) 672-5453 **Toll-Free:** 1(800) 361-6388

or visit us online at **www.nettinc.com**

Distributed by: